Cable	MR195
OD	ø4.95±0.1mm
Cover	Black
FME F	Nickel-plated

ROHS

ISO 9001
ISO 14001

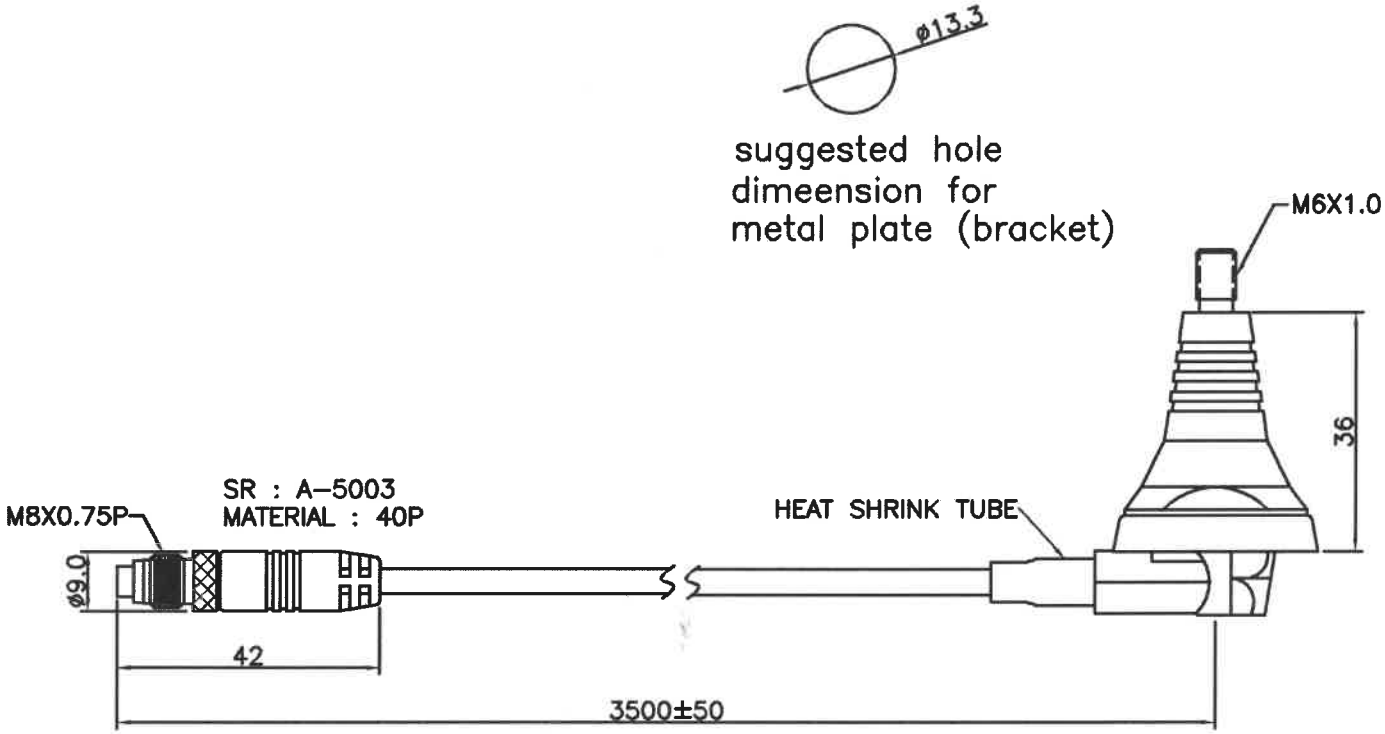

NO	DESCRIPTION	MATERIAL / FINISH	Q'TY
Part NO	EG-C07195FME-5733D		

Material:		Treatment:		TRANSVOICE			
Drawer	Design	Aprov	Tolerance	Unit: mm		TITLE	C07A +MR195+FME F
			X=±0.5 .X=±0.2 .XX=±0.1 .XXX=±0.05	Ver: A	Scale 1:1	Model NO	200-031
				File NO: QR0402		Drawing NO	100-27001-0163